ELECTRIC COMBI STEAMER

ALPHA-STE

Multipurpose combi steamer with built-in steam generatorfor dry heat, steam and combi cooking

ALPHATECH
YOUR NEXT OVEN

AME 071 P

7 x 1/1 GN

0707 - Rev. 02

CONSTRUCTION DETAILS

- Stainless steel 18/10 AISI 304 cooking compartment with long radius rounded corners for a perfect cleaning (HACCP requirements) and fully water-proof
- Thermic insulation of 35 mm rock wool
- Thermic brake between the cavity and oven front panel, to absorbe steel expansion
- Double glazed door with large air interspace for a perfect heat insulation
- Hinged inner glass for a perfect cleaning
- Adjustable door hinges
- Fit-in type door seal of heat resistant silicon rubber
- Buil-in door drip tray collecting the condensate into the cavity drip tray; then into the oven drain
- Front removable control panel for an easy service and check of components
- AISI 304 fully insulated steam generator
- Two water inlets (soft and cold water)
- Connections gathered at the oven right side
- External connection for meat probe (optional)
- Removable side racks for 7 x 1/1 Gn capacity; 70 mm distance between layers
- High quality world wide available components

ELECTRIC HEATING SYSTEM

- Cavity heating elements of armoured INCOLOY 800 type
- Steam generator heating elements of armoured INCOLOY 800 type
- Energy Saving device for reduced energy consumption

OPERATIONAL FUNCTIONS

- Electronic and programmable control panel with push-buttons for manual functions
- Self-diagnosis at the start of the unit with fault display and alarm
- Cooking modes choice with display of pre-set time and temperature
- Programmability of 91 cooking programs of 9 cycles each for sequencial cooking; three Regenerating programs are available with one modifiable
- Cook & Hold mode controlled by the meat probe or by the timer
- Autoreversing fan rotation
- Cavity fast cool down with automatic stop at 50°C
- Automatic cavity cooling between a high temperature cycle and the next cycle featuring a lower temperature
- Manual humidifier
- AT-CLIMA system to control the percentage of humidity during the cooking and food rethermalisation
- Motorized cavity vent for a fast evacuation of moisture
- Timed oven lights with halogen lamps positioned between the inner & outer doors
- Automatic boiler pre-heating
- Cavity clean program "CL"
- Boiler De-scaling program "DE"
- Boiler De-scale alarm
- Automatic boiler drain (with controlled water temperature) and rinsing
- Automatic quenching of vapours into the oven drain
- Check of cavity steam saturation with automatic energy saving
- Easily accessible Service program for:

- PC board diagnosis
- Check of internal probes
- Check of cavity and boiler operating hours

SAFETY FEATURES

- Cavity safety thermostat
- Boiler safety thermostat
- Device against pressure built-up in cavity and boiler
- Fan motor thermic protection
- Door switch
- Boiler water level probes
- Lack of water displayed alarm
- Displayed diagnostic
- Component cooling system

OPTIONS

- Standard core probe SC with external connection
- Needle probe for vacuum packs SE002 with external connection
- Right hinged door PS001
- Special and marine voltages
- Side runners for 600 x 400 trays mod. PAA06 (6 trays) - PAA07 (7 trays)
- Removable rack SGA07
- Trolleys CR061
- Fat filter FXA07
- Extraction hood with steam condenser BKA064
- Stands ASR07 - ASP07
- Holding cabinets AAC07
- Cabinet AAN07
- Hand shower LD25
- Connection for energy saving system SN
- Connection for an external printer (type RS 232)

TECHNICAL DATA

External dimensions	mm	950 x 805 x 790 h
Weight	Kg	-
Total electric power	kW	8
Nominal heating output	kW/kcal	- / -
Chamber heating output	kW/kcal	7,5 / -
Steam heating output	kW/kcal	7,5 / -
Fan power	kW	0,5
Power supply voltage		3N AC 400 V - 50 Hz

CAPACITY

7 x 1/1 GN

- With side racks: 7 x 1/1 GN and distance between layers 70 mm
- With rack SGA07: 7 x 1/1 GN and distance between layers 65 mm

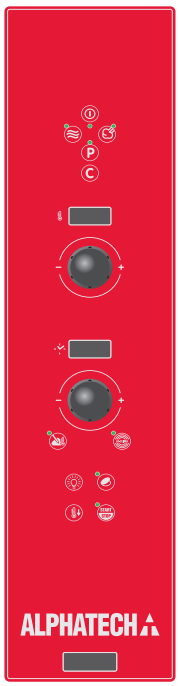

P VERSION

Manual controls with electronic control, programmability of 91 cooking programs of 9 cycles each for sequencial cooking, three Regenerating programs are available with one modifiable, numerical displays, AT-CLIMA with automatic vent, self-diagnosis, automatic reverse (distribution of the air in the chamber with automatic reversing of the fan direction), cavity fast cooling with open door, humidifier and cavity lights.

OPTIONAL: core probe, hand shower

OPERATING MODES

- Convection with AT-CLIMA 30°C - 300°C
- Steam 30°C - 130°C (low temperature, atmospheric, forced)
- Combined steam/convection with AT-CLIMA 30°C - 300°C
- Reheating with AT-CLIMA 120°C - 140°C
- Automatic sequence cooking
- Temperature hold with AT-CLIMA function

I dati riportati sul presente documento sono da ritenersi non vincolanti. L'azienda si riserva di apportare modifiche tecniche in qualsiasi momento. The specifications shown in this document are to be considered not binding. The company reserves the right to make technical changes at any moment. Die auf dieser Unterlage angegebenen technischen Daten sind als unverbindlich anzusehen. Die Firma behält sich das Recht vor zu jeder zeit technische Änderungen vorzunehmen. Les données techniques sur ce document ne doivent pas être considérées contraignantes. La société se réserve le droit d'apporter des modifications techniques à tout moment. Los datos tecnicos indicados en el presente catálogo no son vinculantes. La empresa se reserva el derecho de efectuar modificationes sin previo aviso.

AME 071 P

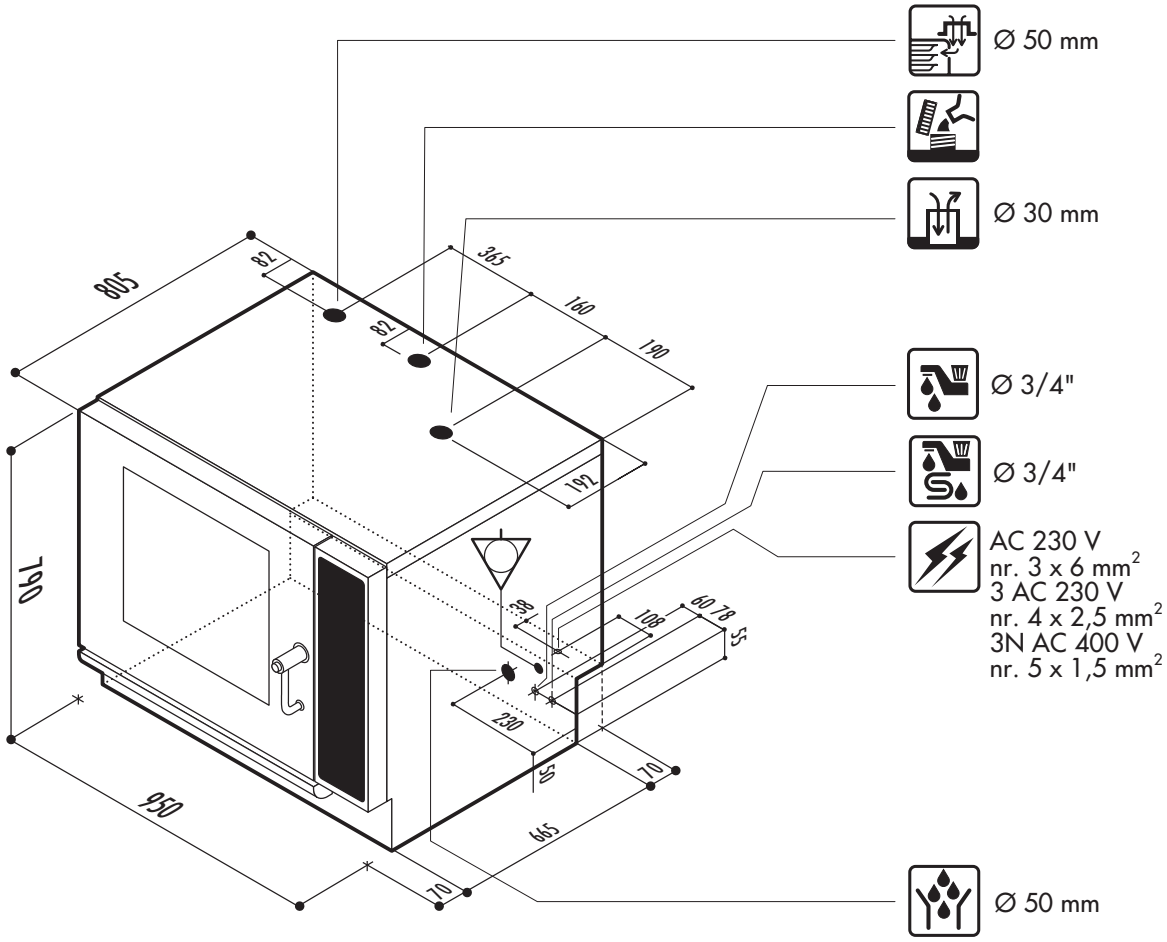

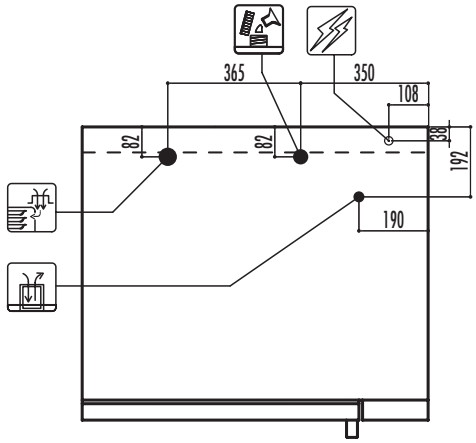

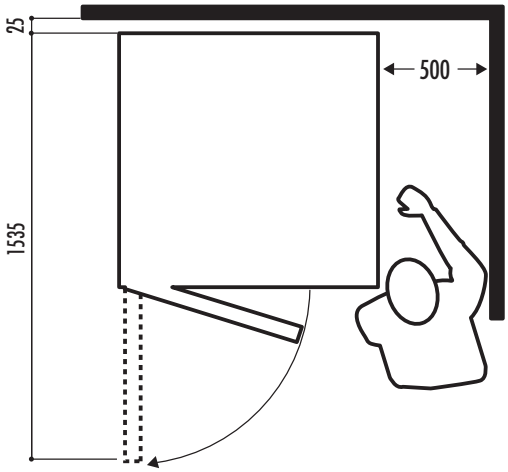

I dati riportati sul presente documento sono da ritenersi non vincolanti. L'azienda si riserva di apportare modifiche tecniche in qualsiasi momento. The specifications shown in this document are to be considered not binding. The company reserves the right to make technical changes at any moment. Die auf dieser Unterlage angegebenen technischen Daten sind als unverbindlich anzusehen. Die Firma behält sich das Recht vor zu jeder zeit technische Änderungen vorzunehmen. Les données techniques sur ce document ne doivent pas être considérées contraignantes. La société se réserve le droit d'apporter des modifications techniques à tout moment. Los datos tecnicos indicados en el presente catalogo no son vinculantes. La empresa se reserva el derecho de efectuar modificationes sin previo aviso.

24.07.2007

ALPHATECH ALI S.p.A.
Via Schiaparelli, 15 - Z.I. S. Giacomo di Veglia - 31029 Vittorio Veneto (TV) - Italy
Tel. (+39) 0438 912588 - Fax (+39) 0438 911939